Republic of the Philippines
SOCIAL SECURITY SYSTEM
East Avenue, Diliman Quezon City * Trunkline Number: (+632) 8709 7198
Email: usssaptayo@sss.gov.ph * Website: www.sss.gov.ph

26 July 2026

Dear Sir/Madam,

Please furnish us with your quotation on or before **JULY 30, 2026 @ 10:00 AM** for the items listed in the attached **Request for Quotation (RFQ).**

Kindly accomplish the **RFQ Form No. 26-07-169_1 LOT, CONSTRUCTION OF 8-METER FLAGPOLE AT THE SSS MAIN OFFICE (1ST EXTENSION)** together with the **Bidder's Information** and indicate your confirmation on the **Terms and Conditions** by signing the **Certification.**

You may refer to the Instruction to Suppliers for the procedure on the submission of quotation and reminders.

Thank you.

Respectfully yours,

ROSALYN D. AZUL-CONDAT
Department Manager III, BAC-SD

PHILGEPS REF. #: 47270
PUBLISHED DATE: 07/16/26
POSTED BY: RITA DIZON
POSTPONED FROM: 07/23/26

REQUEST FOR QUOTATION (RFQ) FORM

RFQ Number	RFQ Date	ABC	APP NO.
26-07-169	**July 26, 2026**	**₱ 258,606.70**	**2026-2988 (19th Update for the month of June – Updated APP Version No. 88)**

CONSTRUCTION OF 8-METER FLAGPOLE AT THE SSS MAIN OFFICE				
Lot No. (a)	**Qty. (b)**	**P A R T I C U L A R S (c)**	**Bid/Cost Breakdown**	
			Unit Cost (d)	**Total Cost (e) = (b) x (d)**
1	**1 LOT**	• **CONSTRUCTION OF 8-METER FLAGPOLE AT THE SSS MAIN OFFICE** **ABC: ₱ 258,606.70**	**₱_____/ LOT**	**₱_____**
		Grand Total Cost:		**₱_____**

Total Offered Quotation (Inclusive of VAT) in words:

_____

_____

Please completely fill-out and submit this form together with:

Annex A – Technical Specification / Statement of Compliance / Documentary Requirements
Annex B – Bill of Quantities
Annex C – Perspective

Validity of Quotation/Offer	• Ninety (90) calendar days from deadline of submission and opening of sealed quotation up to approval of award
Delivery Terms and Place	• Work Hours/Schedule: 8:00am onwards • Within Forty Five (45) calendar days starting from the receipt of Approved Job Order/ Purchase Order • The supplier must deliver all goods to the SSS Main Office, East Avenue, Diliman, Quezon City.
Payment Terms	• Government Terms • One-time payment, upon delivery of items/services and submission of complete billing documents. • Payment shall be directly credited to the Supplier's bank account. • SSS shall withhold the applicable taxes from the amount payable in accordance with the BIR Regulations. • The Official Receipt (OR) or Acknowledgement Receipt (AR) for payments received shall be submitted to the Cash Management Department within two (2) days from the receipt of notification of payment made, or from the date the payment is credited to your bank account, whichever is earlier.

BIDDER'S INFORMATION		
Business Name	**Address**	
Name of Company Representative	**Email Address**	**Telephone/Mobile Number**
PhilGEPS Registration No.	**SS Number**	**BIR TIN**

TERMS AND CONDITIONS

1. **For contract price amounting to P100,000.00 and above**, the winning Supplier shall be required to post a Performance Security from receipt of Notice of Award equivalent to % of Contract Price as follows:
   - 5% (Goods & Consulting Services) or 10% (Infrastructure) Cash, Cashier's/Manager's Check, Bank Draft/Guarantee, or
   - 30% Surety Bond callable upon demand.
2. If two (2) or more Suppliers submitted the same price quotation and have been post-qualified as the suppliers with Lowest Calculated and Responsive Quotations, the procuring unit shall use "draw lots" or similar method of chance to break the tie.
3. Alternative offer shall not be allowed. Any bid exceeding the ABC shall be a ground for disqualification.
4. Incompletely filled out Bid Breakdown shall be considered non-responsive and automatically disqualified but specifying a zero (0), dash (-), or the word "free" for the said item would mean that it is being offered for FREE to the SSS.
5. All prices must be rounded off to two decimal places. Any prices presented otherwise will be rounded off to two decimal places and arithmetically corrected during the evaluation process.
6. In case of discrepancy between the submitted quotation and the quotation after arithmetical correction, the supplier shall be informed of such discrepancy for confirmation of the new amount. **If the bidder fails to confirm the arithmetical corrections within three (3) calendar days from receipt of notification, the quotation as calculated shall be considered unconfirmed and result to disqualification of bidder.**
7. In case a prospective supplier/service provider submits a filled-out RFQ with a supporting document (i.e., a price quotation in a different format), both documents shall be considered provided that the terms and conditions stated therein is in conformity with the requirements of the RFQ. **In case of discrepancies, the submitted quotation shall be considered ineligible or not compliant.** Submissions not using the RFQ form shall be considered only if they fully address and certify compliance with all the stated requirements, terms, and conditions of this RFQ.
8. Quantity is subject to change but not to exceed the contract amount.
9. Award shall be on a **"LOT BASIS"** and the date of conduct/start of the project is subject to change.

INSTRUCTIONS TO SUPPLIERS

1. For clarification of details, please contact **Bids and Awards Committee – Secretariat Department at 8709-7198 local 3421 / 3425 / 3428 / 3470 and direct line 89221070** or via e-mail **bac@sss.gov.ph / bacsealedquotations@sss.gov.ph .**
2. Supplier should indicate "COMPLY" or "NOT COMPLY" in the STATEMENT OF COMPLIANCE COLUMN, if applicable. Failure to indicate compliance and non-compliance will mean automatic disqualification.
3. Sealed Quotations may be submitted through the following:
   a. DROP BOX located at Bids and Awards Committee – Secretariat Department, 2nd Floor, SSS Main Bldg., East Ave., Diliman, Quezon City. It shall be addressed to DM Rosalyn D. Azul-Condat – Department Manager III of the BACSD.
   Indicate in the sealed envelope the RFQ Number, company name, name of company representative, business address, and contact details.
   b. ELECTRONIC MAIL at **bacsealedquotations@sss.gov.ph** with the following requirements:

i. Quotations and attachments should be in portable document format (pdf), compressed/zipped and protected by a password. (See attached Guide in Creating password protected zip file folder.)
ii. File name of the zip file folder shall be by **RFQ number and Project Title.**
iii. The Supplier who timely submitted its Sealed Quotation but who fails to provide its password on the date and time of opening shall be disqualified.
iv. Passwords shall be made available only through email (**bacsealedquotations@sss.gov.ph**) and before the opening of bids which is scheduled on:

DATE: **JULY 30, 2026** TIME: **10:00 AM**

4. The winning supplier shall accomplish and sign the emailed or issued **Notice of Award** (NOA) within three (3) calendar days from receipt and immediately submit the signed copy to the PPMD, if applicable, upon issuance. Failure to comply may result in the cancellation of the award.
5. In compliance with **Republic Act No. 6713** (Code of Conduct and Ethical Standards for Public Officials and Employees), the SSS does not solicit or accept, directly or indirectly, any gift, gratuity, favor, entertainment, loan, or anything of monetary value from bidders or suppliers at any state of the procurement process, from RFQ issuance and canvassing through contact implementation. Bidders are cautioned against individuals or groups falsely claiming to represent the SSS and soliciting money, gifts, or other benefits for any purpose. **Do not give anything to these individuals or group.** Any form of solicitation by persons claiming to represent the SSS should be immediately reported to the **Head of the Procurement Management Division** at burgosee@sss.gov.ph or (02) 8709-7198 local 3390.

GENERAL CONDITIONS OF THE CONTRACT

1. The SUPPLIER shall deliver the goods in accordance with the description and quantity specifications of the Purchase Order/Job Order.
2. The SUPPLIER shall deliver the goods within the period indicated in the Purchase Order. A penalty of 1/10 of 1% of the total amount of the items shall be imposed for every day of delay in delivery.
3. The SUPPLIER shall deliver Goods/Services which must all be fresh stock, brand-new, unused, properly sealed, and which are not set to expire within two (2) years from date of delivery to the SSS, if applicable.
4. The SUPPLIER warrants that all the Goods/Services have no defects arising from design, materials, or workmanship or from any act or omission of the Supplier or the manufacturer that may develop under normal use of consumables, if applicable.
5. For Goods, the SUPPLIER shall replace any defective item within twenty-four (24) hours from the time that it was notified by the SSS of the defect. Defects detected only after the item is installed and used are covered by the replacement warranty which will be in effect for every item until its expiry date. Replacement of defective item shall have no cost on the SSS, if applicable.
6. To assure that manufacturing defects shall be corrected by the SUPPLIER, a warranty security shall be required from the SUPPLIER for a minimum of three (3) months in the case of expendable items, or a minimum period of one (1) year in the case of non-expendable items, after the acceptance of the delivered items. The obligation for the warranty shall be covered, at the Supplier's option, by either retention money in an amount equivalent to five percent (5%) of total purchase price, or a special bank guarantee equivalent to five percent (5%) of the total purchase price with validity period starting from the date of acceptance. The said amounts shall only be released after the lapse of the warranty period
7. If the SUPPLIER, having been notified, fails to remedy the defect(s) within the specified period, the SSS may proceed to take such remedial action as may be necessary, at the SUPPLIER's risk and expense and without prejudice to any other rights which the SSS may have against the SUPPLIER under these Terms and Conditions and under the applicable law.
8. The pricing of the Goods/Services shall be in Peso and inclusive of Twelve Percent (12%) Value-Added Tax (VAT).

MISCELLANEOUS PROVISIONS

1. **Confidentiality**. Neither Party shall, without the prior written consent of the other, disclose or make available to any person, make public, or use directly or indirectly, except for the performance and implementation of the works, any confidential information acquired from an information holder in connection with the performance of this Agreement, unless: (i) the

information is known to the disclosing Party, as evidenced by its written records, prior to obtaining the same from the information holder and is not otherwise subject to disclosure restrictions on the disclosing Party, (ii) the information is disclosed to the disclosing Party by a third party who did not receive the same, directly or indirectly, from an information holder, and who has no obligation of secrecy with respect thereto, or (iii) required to be disclosed by law.
The obligation of confidentiality by both Parties, as provided herein, shall survive the termination of this Agreement.

2. **Merger and Consolidation**. In case of merger, consolidation or change of ownership of the SUPPLIER with another company, it is the responsibility of the surviving company/consolidated company/acquiring entity to inform the SSS of the change in corporate structure/ownership. Failure to do so shall translate in such company assuming all liabilities of the acquired/merged company under this Agreement.
3. **Force Majeure.** The SUPPLIER shall not be liable for forfeiture of its performance security, liquidated damages, or termination for default if and to the extent that the SUPPLIER's delay in performance or other failure to perform its obligations under this Agreement is the result of a force majeure.
   For purposes of this Agreement the terms "force majeure" and "fortuitous event" may be used interchangeably. In this regard, a fortuitous event or force majeure shall be interpreted to mean an event which the SUPPLIER could not have foreseen, or which though foreseen, was inevitable. It shall not include ordinary unfavorable weather conditions; and any other cause the effects of which could have been avoided with the exercise of reasonable diligence by the SUPPLIER. Such events may include, but not limited to, acts of the SSS in its sovereign capacity, wars or revolutions, fires, floods, epidemics, quarantine restrictions, and freight embargoes.
4. **Non-Assignment**. Neither Party may assign the Contract in whole or in part without the consent of the other Party.
5. **Waiver**. Failure by either Party to insist upon the other the strict performance of any of the terms and conditions hereof shall not be deemed a relinquishment or waiver of any subsequent breach or default of the terms and conditions hereof, which can only be deemed made if expressed in writing and signed by its duly authorized representative. No such waiver shall be construed as modification of any of the provisions of this Agreement or as a waiver of any past or future default or breach hereof, except as expressly stated in such waiver.
6. **Cumulative Remedies.** Any and all remedies granted to the Parties under the applicable laws and this Agreement shall be deemed cumulative and may, therefore, at the sole option and discretion, be availed of by the aggrieved Party simultaneously, successively, or independently.
7. **No Employer-Employee Relationship**. It is expressly and manifestly understood and agreed that the employees of the SUPPLIER assigned to perform the PROJECT are not employees of the SSS. Neither is there an employer-employee relationship between the SSS and the SUPPLIER.
   This Agreement does not create an employer-employee relationship between the SSS and the SUPPLIER including its personnel; that the PROJECT rendered by the personnel assigned by the SUPPLIER to the SSS in the performance of its obligation under this Agreement do not represent government service and will not be credited as such; that its personnel assigned to the SSS are not entitled to benefits enjoyed by SSS' officials and employees such as Personal Economic Relief Allowance (PERA), Representation and Transportation Allowance (RATA), ACA, etc.; that these personnel are not related within the third degree of consanguinity or affinity to the contracting officer and appointing authority of the SSS; that they have not been previously dismissed from the government service by reason of an administrative case; that they have not reached the compulsory retirement age of sixty-five (65); and that they possess the education, experience and skills required to perform the job. The SUPPLIER hereby acknowledges that no authority has been given by the SSS to hire any person as an employee of the latter. Any instruction given by the SSS or any of its personnel to the SUPPLIER's employees is to be construed merely as a measure taken by the former to ensure and enhance the quality of PROJECT performed hereunder. The SUPPLIER shall, at all times, exercise supervision and control over its employees in the performance of its obligations under this Agreement.
8. **Partnership**. Nothing in this Agreement shall constitute a partnership between the parties. No Party or its agents or employees shall be deemed to be the agent, employee or representative of any other Party.
9. **Compliance with SS Law.** The SUPPLIER shall report all its employees to the SSS for coverage and their contributions, as well as all amortizations for salary/education/calamity and other SSS loans shall be updated. Should the SUPPLIER fail to comply with its obligation under the provisions of the SS Law and Employees' Compensation Act, the SSS shall have the authority to deduct any unpaid SS and EC contributions, salary, educational, emergency and/or calamity loan amortizations, employer's liability for damages, including interests and penalties from the SUPPLIER's receivables under this Agreement.

Further, prescription does not run against the SSS for its failure to demand SS contributions or payments from the SUPPLIER. Moreover, the SUPPLIER shall forever hold in trust SS contributions or payments of its employees until the same is fully remitted to the SSS.

10. **Compliance with Labor Laws.** The SUPPLIER, as employer of the personnel assigned to undertake the PROJECT, shall comply with all its obligations under existing laws and their implementing rules and regulations on the payment of minimum wage, overtime pay, and other labor-related benefits as well as remittances or payment of the appropriate amount or contributions/payment (SSS, EC, Pag-IBIG, PhilHealth and taxes) with concerned government agencies/offices.

    It is agreed further, that prior to the release of any payment by the SSS to the SUPPLIER, its President or its duly authorized representative, shall submit a sworn statement that all moneys due to all the employees assigned to the PROJECT as well as benefits by law and other related labor legislation have been paid by the SUPPLIER and that he/she assumed full responsibility thereof.
11. **Compliance with Tax Laws.** The SUPPLIER shall, in compliance with tax laws, pay the applicable taxes in full and on time and shall regularly present to the SSS within the duration of this Agreement, tax clearance from the Bureau of Internal Revenue (BIR) as well as copy of its income and business tax returns duly stamped by the BIR and duly validated with the tax payments made thereon, if applicable. Failure by the SUPPLIER to comply with the foregoing shall entitle the SSS to suspend payment of the Contract Price.
12. **Liquidated Damages.** If the SUPPLIER fails to satisfactorily deliver any or all of the Goods and/or to perform the Services within the period(s) specified in the PBD inclusive of duly granted time extensions if any, the SSS shall, without prejudice to its other remedies under this Agreement and under the applicable law, deduct from the Contract Price, as liquidated damages, the applicable rate of one tenth (1/10) of one (1) percent of the cost of the unperformed portion for every day of delay until actual delivery or performance. Once the amount of liquidated damages reaches ten percent (10%), the SSS may rescind or terminate this Agreement, without prejudice to other courses of action and remedies open to it.
13. **Hold Free and Harmless**. The SUPPLIER agrees to defend, indemnify, and hold the SSS free and harmless from any and all claims, damages, expenses, fines, penalties and/or liabilities of whatever nature and kind, whether in law or equity, that may arise by reason of the implementation of the Agreement. In addition, the SUPPLIER agrees to indemnify the SSS for any damage as a result of said implementation.
14. **Settlement of Disputes.** All actions and controversies that may arise from the Contract involving but not limited to demands for specific performance of the obligations as specified herein and/or in the interpretation of any provisions or clauses contained herein, shall, in the first instance, be settled within thirty (30) calendar days through amicable means, such as, but not limited to mutual discussion. Should the dispute remain unresolved by the end of the afore-mentioned period, the dispute shall be settled in accordance with applicable provisions of Republic Act No. 9285, otherwise known as the Alternative Dispute Resolution Act of 2004.
15. **Venue of Actions**. Any suit or proceeding arising out of or relating to the contract shall be instituted in the appropriate court in Quezon City, the Parties hereto waiving any other venue.
16. **Governing Law.** This Agreement shall be governed by and interpreted according to the laws of the Republic of the Philippines.
17. **Amendments.** This Agreement may be amended only in writing and executed by the Parties or their duly authorized representatives.
18. **Separability**. If any one or more of the provisions contained in this Agreement or any document executed in connection herewith shall be invalid, illegal or unenforceable in any respect under any applicable law, then: (i) the validity, legality and enforceability of the remaining provisions contained herein or therein shall not in any way be affected or impaired and shall remain in full force and effect; and (ii) the invalid, illegal or unenforceable provision shall be replaced by the parties immediately with a term or provision that is valid, legal and enforceable and that comes closest to expressing the intention of such invalid, illegal or unenforceable term or provision.
19. **Binding Effect.** This Agreement shall be binding upon the Parties hereto, their assignee/s and successor/s-in-interest.
20. **Non-Publicity**. No press release in oral, written or electronic form shall be issued covering this transaction without prior written approval of the SSS. Inclusion in any reference lit shall also be undertaken only upon prior written approval of the SSS.

CERTIFICATION

This is to certify that my company conforms with the above Terms and Conditions, and that the data/quotation indicated is true, correct, and valid.

_____
Owner/Company Representative
(Signature over Printed Name)

_____
Date

***Note**: The Supplier must sign over printed name on the CERTIFICATION above. Non-compliance with this instruction is a ground for disqualification of submitted quotation.*

ANNEX A. TECHNICAL SPECIFICATION

Suppliers/Bidders should indicate "**COMPLY**" or "**NOT COMPLY**" to each specification below. Please do not leave any portion blank as it will result to disqualification of quotation/bid.

CONSTRUCTION OF 8-METER FLAGPOLE AT THE SSS MAIN OFFICE

LOT NO.	TECHNICAL SPECIFICATIONS	STATEMENT OF COMPLIANCE
1	**I. Scope of Works** The work contemplated under this contract shall consist of the furnishing of all materials, labor, plans, tools and equipment, permits including the satisfactory performance of all work necessary for the complete execution of all the work as shown on the plans, specifications and other contract documents. Materials deemed necessary to complete the work but not specifically mentioned in the specifications, working drawings or in the other contract documents are inferred, and shall be supplied and installed by the contractor without extra cost to the owner. Such material shall be of the highest quality available, installed and applied in workmanlike manner at prescribed or appropriate locations. **A. PRELIMINARY WORKS** 1. Clearing and Preparation of Work Areas, including Temporary Storage and Access Arrangements. 2. Assembly/Disassembly of scaffoldings including Safety set-up barricades, signages and protective enclosures and project billboards and permits if necessary. 3. Cleaning of area after work including hauling and disposal of waste/unusable materials and debris **B. SITE DEVELOPMENT WORKS** 1. Structural excavation including site clearing, restoration structures affected by the construction and embankment from the Structural Excavation including compaction 1.1. All foundation shall be excavated to grades and dimensions indicated in the drawing. 1.2. If the required bearing capacity is not obtained at the excavation indicated of the drawings, the excavations shall be	

continued until such safe bearing power is obtained.

1.3. Footing shall not be placed on fill.

1.4. Excavations shall be protected from damage of rainwater, spring water and backing of drains. Drainages shall be built for this purpose. Shoring, bracing and sheathing shall be provided for the safety of necessary support for adjoining walls, soil, building and fences.

1.5. All excavations shall be backfilled presently as work permits after concrete walls and pipes have attained full design strength.

1.6. Materials for filling shall be free from waste and objectionable matters. Filled excavations shall be thoroughly tamped.

1.7. All filling materials, whether native to the site or imported, shall be free of debris, roots, vegetation, or other deleterious materials. All earth fill materials, sand and gravel shall be free of any clods or stones larger than 50mm in their largest dimension except as otherwise shown or specified.

1.8. Bedding materials shall be used as shown in the drawings and as directed by the PE. The stone shall be 19mm (3/4 in.) maximum size graded by weight as follows;

Sieve Size (Square Openings)	Percent by Weight
19 mm (3/4 inch)	90-100
12 mm (1/2 inch)	10-50
9.5 mm (3/8 inch)	0-20
4.75 mm (No. 4)	0-5

C. STRUCTURAL WORKS

1. Portland Cement

1.1. Portland cement shall conform to the standard specifications for consignment numbers, dates of dispatch and delivery quantity and dates of use.

1.2. At time of use, all cements shall be free flowing and free of lumps. Lumpy or air set cement shall not be used unless the lumps can be crushed to power between fingers and thumb.

1.3. Cement delivered in bags shall be stored one well-ventilated waterproof sheds with suitable elevated wooden floors and shall be kept perfectly dry.

2. Concrete Aggregates

2.1. Aggregates used in concrete shall conform to the standard specifications for concrete aggregates.

2.2. Aggregate failing to meet those specifications, but which have shown by approved laboratory tests to produce concrete of the required quality may be used.

2.3. Aggregates shall be quarried or washed on fresh water and shall contain no more than one percent silt by weight.
2.4. The coarse aggregate of different sizes shall be stored in a separate bunkers or piles in such manners as to prevent aggregation inclusion and contamination by dirt and other foreign materials.

3. Water
   3.1. Water used in concrete shall be clean, free from oils, alkalis, or other matter detrimental to the quality or durability of concrete.
   3.2. Water shall be stored in tanks and not be allowed or exposed to dust and falling leaves.

4. Reinforcing Steel Bar
   4.1. Steel reinforcing bars shall be of the yield grade in the structural drawings and in the job specifications sheets and conforming to ASTM a615, “Specification for deformed billet. Steel bars for concrete reinforcements specified herein and/or the details on the drawings. Shop drawings are required for all structural steel and shall be submitted to the engineers/ consultant for approval.
   4.2. Unless otherwise indicated in the plans, reinforcing bars shall be deformed steel bars and shall conform to the requirements of the “specification for billet- Steel bars for concrete reinforcement”.
   4.3. Reinforcing steel shall be transported and stored at the site in such a way as to prevent damage or deterioration of the steel for use in the reinforced concrete.
   4.4. All reinforcing steel shall be free from mill scale, oil, grease, tar, paint, etc., and loose rust shall be removed before use.
   4.5. Use G.I wire, gauge No. 16 for binding reinforcing steel bars.
   4.6. Welded joints shall be done in accordance with the American Welding society.
   4.7. All reinforcements shall be carefully cut and bent in accordance with the drawings and schedules.

5. Concrete Proportions And Consistency
   5.1. The proportions of aggregate to cement for any concrete shall be such as to produce a mixture that will work readily. Concrete proportions for footing shall be 1:2:3 for beams and Columns shall be 1:2:4 and shall produce a concrete strength of fc=20.7 Mpa.

   With the placement method used into corners and angles of forms around reinforcements, segregation of materials in the mixtures or collection of excess free water on the surface shall not be permitted. The slump of concrete shall be the minimum that is practicable.

   When vibrators are used to consolidate concrete, the slump shall not exceed 4 inches; otherwise, the slump shall not exceed 6

	inches. Addition of water during hot weather to maintain the same slump must be compensated by adding more cement or retain the correct water-cement ratio. 5.2. The method of measuring concrete materials shall be such that proportions can be accurately controlled and easily checked at any time during the work. 28 days concrete strengths shall be tested and shall be proportioned according to the results of the test. 6. Formworks 6.1. Woods forms shall be sound, smooth, properly seasoned, good quality lumber, free from large, loose knots and otherwise suitable to facilitate finishing exposed concrete surface. 6.2. Formworks shall be built to resist distortion or deflection, tight to prevent loss of liquid from the concrete. 6.3. Formworks shall be coated with form oil of an approved make and care shall be taken to avoid the spilling of oil on reinforcement. 7. Mixing And Pouring Of Concrete 7.1. Unless otherwise authorized by the supervising engineer, concrete shall be machine mixed at the site. 7.2. Concrete shall be thoroughly mixed in a batch mixer of an approved size and type which shall ensure a uniform distribution of the materials throughout the mass, so that the mixer is homogenous and uniform in color. 7.3. The first batch of concrete materials placed in the mixer shall contain a sufficient excess of cement, sand and water to cut the inside of the drain with-out reducing the required mortar content of the mix. 7.4. Hand mixing shall only be allowed in case of emergencies and only upon direct supervision of the engineer-in-charge. It must be done in watertight platform. 7.5. In preparation for the placing of concrete, all sawdust, ships and other construction debris and all extraneous matter will be removed from the interior of forms, struts and stays. 7.6. Temporary discontinuance of pouring shall be referred to the supervising. **D. SPECIALTY WORKS** 1. Hot-dipped galvanized 1/8" thk steel flagpole, tapering diameter - 150mm bot. & 75mm top, painted with epoxy enamel & silver aluminum paint, including accessories	
	II. WORKMANSHIP All required phases of work shall be done by skilled and competent men who regularly engage or specialize in the type of work specified. Workmanship shall be the very best trade practice.	

	III. SITE EXAMINATION Examine the site premises and all conditions apparent and visible therein. Consider all such conditions that may affect work. Measure every existing work/structure at site. Verify all given dimensions and deviations. It shall be understood that the work covers all exposed external surfaces regardless of measurements made	
	IV. PROTECTION OF WORK PROPERTY Provide adequate protection for existing structures and other areas not affected by the work specified and the ground below. Place warning signs where work is being undertaken.	
	V. CLEANING Leave premises clean, neat and orderly. Remove all stains, spots, blemishes, soil dirt from all finished work. Remove all excess materials, used containers, tools, equipment and supplies out of the work area during the progress upon completion of work.	
	VI. SUBMITTALS Samples of finishes, furnished materials and equivalent materials for approval by the Engineering and Facilities Management Department prior to installation / application.	

DOCUMENTARY REQUIREMENTS

Instructions:

Submission of documentary requirements together with the sealed quotation, as follows:

a. Notarized Omnibus Sworn Statement (using the NGPA-prescribed form of the Government Procurement Policy Board) with attached Notarized Special Power of Attorney (SPA) for Sole Proprietorship or Secretary's Certificate for Partnership/ Corporation, authorizing the representative, if any, to sign on behalf of the owner/company (for ABCs above ₱ 50,000.00)

   Kindly submit the e-mail address and mobile number of the commissioned lawyer who notarized your submitted Omnibus Sworn Statement (OSS), Special Power of Attorney (SPA), or Secretary's Certificate, for our reference during evaluation.

Suppliers that have previously submitted the following requirements that are still <u>valid</u> may no longer resubmit a copy:

b. Mayor's/Business Permit[1]

c. PhilGEPS Registration Number (Red Membership) or PhilGEPS Certificate (Platinum Membership)

NOTE: Submitted documents are subject to verification and validation of its authenticity, genuineness, validity, and completeness. Incomplete submission, concealment, falsification, or misrepresentation of any of the documents submitted, or the contents thereof is a ground for disqualification of submitted quotation.

[1] For individuals engaged under Sec. 53.6, 53.7 and 53.9 of the IRR of RA No. 9184, only the BIR Certificate of Registration shall be submitted in lieu of DTI Registration and Mayor's Permit.

ANNEX B. BILL OF QUANTITIES

Kindly fill-out the Bill of Quantities (BOQ). Incompletely filled out BOQ shall be considered non-responsive and automatically disqualified but specifying zero (0), dash (-), or the word “free” for the said item would mean that it is being offered for FREE to the SSS.

ITEM NO.		DESCRIPTION	QTY	UNIT	MATERIALS, LABOR, EQUIPMENT, MOB/ DEMOB (MARK-UP AND VAT INCLUDED)		TOTAL COST
					UNIT COST	AMOUNT	
(A)		(B)	(C)	(D)	(E)	(F) (C x E)	(M) J + K + L
I.	**PRELIMINARY WORKS**						
	1.1	Clearing and Preparation of Work Areas, including Temporary Storage and Access Arrangements.	1.00	lot			
	1.2	Assembly/Disassembly of scaffoldings including Safety set-up barricades, signages and protective enclosures and project billboards and permits if necessary	1.00	lot			
	1.3	Cleaning of area after work including hauling and disposal of waste/unusable materials and debris	1.00	lot			
						SUBTOTAL I	
II	**SITE DEVELOPMENT WORKS**						
	2.1	Structural excavation including site clearing, restoration structures affected by the construction and embankment from the Structural Excavation including compaction	1.00	lot			
						SUBTOTAL II	
III	**STRUCTURAL WORKS REINFORCE CONTRETE (Class A Mixture)**						
	3.1	Column Footing (1.50m x 1.50m x 0.30m Thk with 16mm dia. Steel Reinforcement)	1.00	set			
	3.2	Column (0.40m x 0.40m with 8-16mm Dia Vert. Bars with 10mm Dia Ties)	1.00	set			
	3.3	Concrete Pedestal including caulk, 10 mm dia holder bar and lightning protection (Pedestal shape - same as existing, proportion to the size)	1.00	set			
	3.4	Formworks (3/4” thk Ordinary plywood on 2”x3” Coco Lumber Bracing Support)	2.10	ln.m			
						SUBTOTAL III	
IV	**SPECIALTY WORKS**						
	4.1	Hot-dipped galvanized 1/8" thk steel flagpole, tapering diameter - 150mm bot. & 75mm top, painted with epoxy enamel & silver aluminum paint, including accessories	1.00	set			
						SUBTOTAL IV	
						TOTAL PROJECT COST	

ANNEX C. PERSPECTIVE

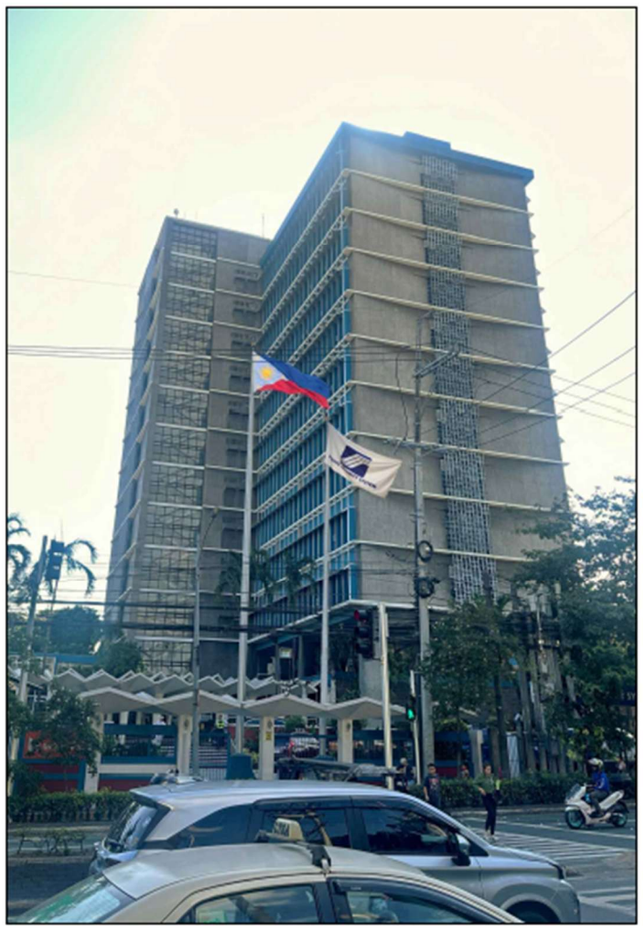

1 S-1 PERSPECTIVE
SCALE: NTS

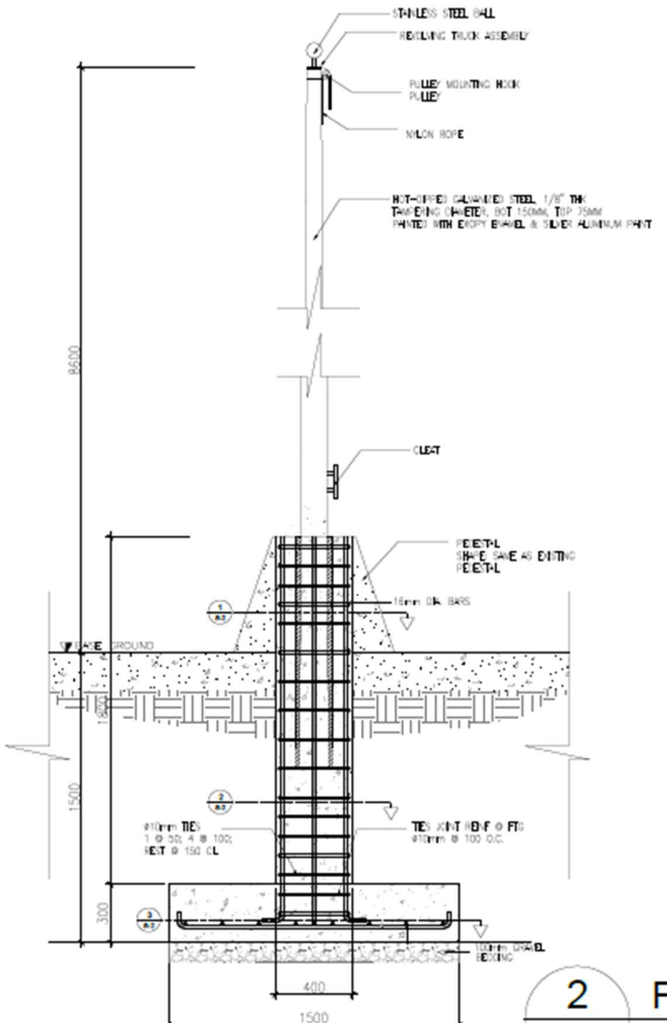

2 S-1 FLAGPOLE DETAILS
SCALE: 1:25

SOCIAL SECURITY SYSTEM Engineering and Facilities Management Department	PROJECT TITLE: CONSTRUCTION OF 8-METER FLAGPOLE AT THE SSS MAIN OFFICE LOCATION: SSS Main Building, East Avenue, Diliman, Quezon City	RECOMMENDING APPROVAL: ANTONIO V. TRINOS, JR. ACTING CEO IV, FMS I	APPROVED BY: CLARK Q. ESPERO ACTING HEAD, ENGINEERING AND FACILITIES MANAGEMENT DEPARTMENT	MBET, FMS I DESIGNED & DRAWN BY: Daryl Joeryl J. Trinidad - Acting SSO IV, MBET	SHEET CONTENT: PERSPECTIVE FLAGPOLE DETAILS	SHEET NO. S-1

RFQ Preparation Date : 23 Jul
RFQ Approval Date : 24 July

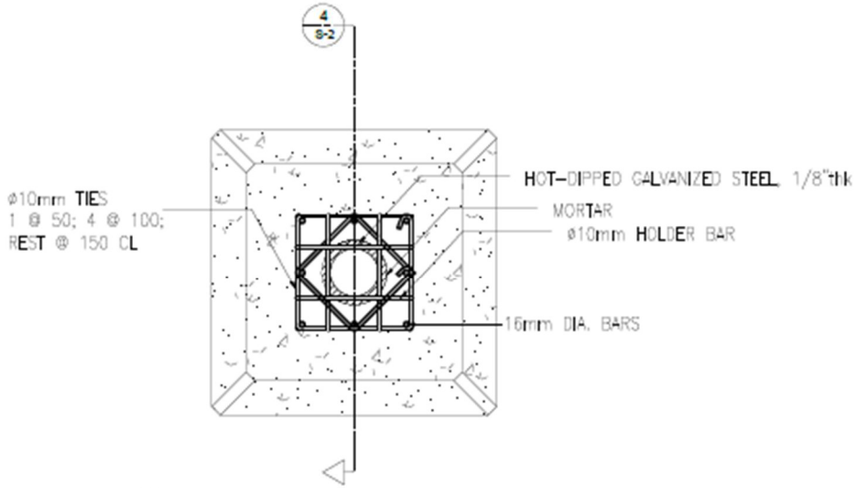

1 S-2 PEDESTAL DETAILS

SCALE: 1:15

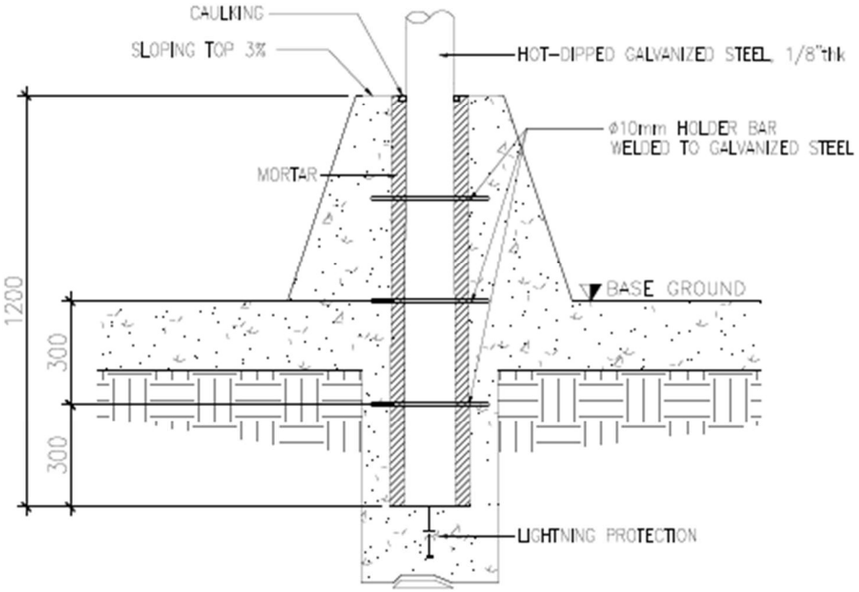

4 S-2 PEDESTAL SECTION

SCALE: 1:15

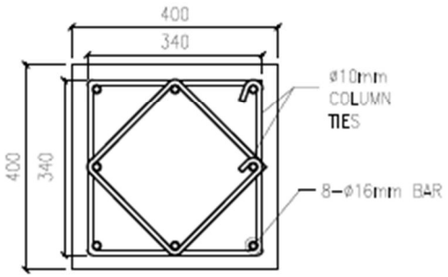

2 S-2 COLUMN DETAILS

SCALE: 1:10

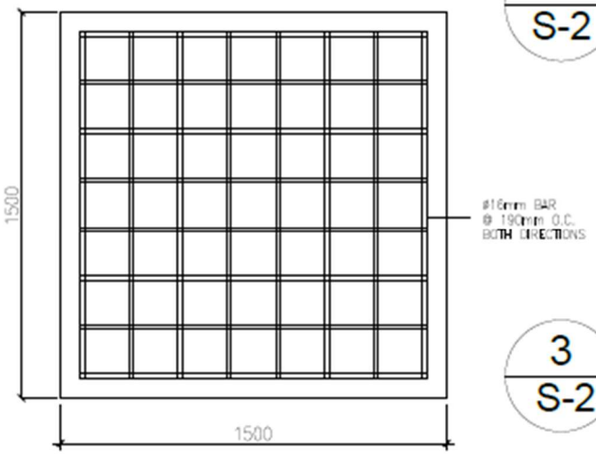

3 S-2 FOOTING DETAILS

SCALE: 1:20

SOCIAL SECURITY SYSTEM Building and Facilities Management Department	PROJECT TITLE: CONSTRUCTION OF 8-METER FLAGPOLE AT THE SSS MAIN OFFICE LOCATION: SSS Main Building, East Avenue, Diliman, Quezon City	RECOMMENDING APPROVAL: ANTONIO V. TRINOS, JR. ACTING CSO IV, FMSI	APPROVED BY: CLARK Q. ESPERO ACTING HEAD, ENGINEERING AND FACILITIES MANAGEMENT DEPARTMENT	MBET, FMS I DESIGNED & DRAWN BY: Daryll Joseph J. Trinidad - Acting SSO IV, MBET	SHEET CONTENT: PEDESTAL DETAILS COLUMN DETAILS FOOTING DETAILS PEDESTAL SECTION	ALL DRAWINGS MUST BE CHECKED ON SITE BY THE CONTRACTOR. ALL ERRORS SHALL BE REPORTED IMMEDIATELY TO THE ARCHITECT AND PROJECT MANAGERS. CONTRACTORS ARE TO WORK AND SHOW THE DRAWINGS AS THE ARCHITECT PRIOR TO COMMENCEMENT OF WORK.	SHEET NO. S-2 DATE JULY 31, 2020